SUBWOOFER

18 SUB 800 XT

Recommended for low frequency reproduction in professional audio projects. Great performance, 97 dBSPL. The 18 SUB 800 XT supports up to 1600w of power in music program. Ideal working range from 38 to 1700 Hz. Excellent linearity and low distortion. Better materials were used in the new 18 SUB 800 XT, provide more stability in the response range and lower power compression due to the new coil heat exchange system. Visit Oversound.com.br, see this and other products that fit perfectly into your design.



SPECIFICATIONS *⑤

NOMINAL DIAMETER:	18 Inches
NOMINAL IMPEDANCE:	8 Ω
MINIMUM IMPEDANCE:	7.0 Ω
RATING POWER * ①:	800 w
PROGRAM POWER * ②:	1600 w
SENSITIVITY * ③:	97 dB
FREQUENCY RANGE:	38~1700 Hz
COIL DIAMETER:	4 Inches
COIL WIRE:	COOPER
COIL SHAPE:	POLYIMIDE
WINDING DEPTH (HVC):	27 MM
GAP HEIGHT (HAG):	15 MM
VOLUME (SPEAKER):	10.1 L

PARAMETERS TS *④

RESONANCE FREQUENCY:	Fs	40 Hz
COIL RESISTANCE:	Re	5.1 Ω
ELECTRICAL QUALITY FACTOR:	Qes	0.45
MECHANICS QUALITY FACTOR:	Qms	7.2
TOTAL QUALITY FACTOR:	Qts	0.42
EQUIVALENT VOLUME:	Vas	185 L
CONE EFFECTIVE AREA:	Sd	1240 cm^2
REFERENCE EFFICIENCY:	No	2.7 %
MAXIMUM DISPLACEMENT:	Xmax	9.75 mm
MAXIMUM PEAK BEFORE DAMAGE:	Xlim	19 mm
MOVABLE MASS:	Mms	180 g
INDUCTANCE:	Le	2.1 mH
BL:		22.8 T-m

RESPONSE CURVE *⑥

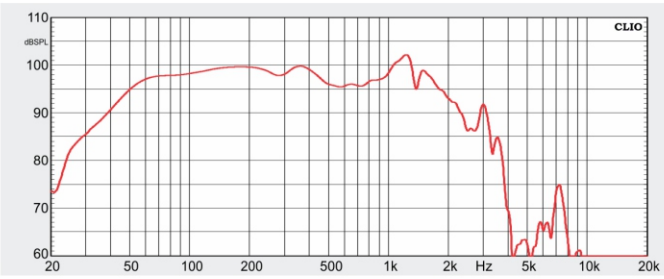

IMPEDANCE

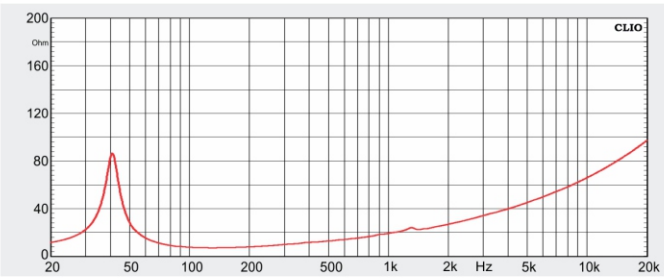

DIMENSIONS

PACKING:	480 x 480 x 245 mm
GROSS WEIGHT:	15.8 Kg
NET WEIGHT:	14.8 Kg

* MESURES IN MILIMETERS.

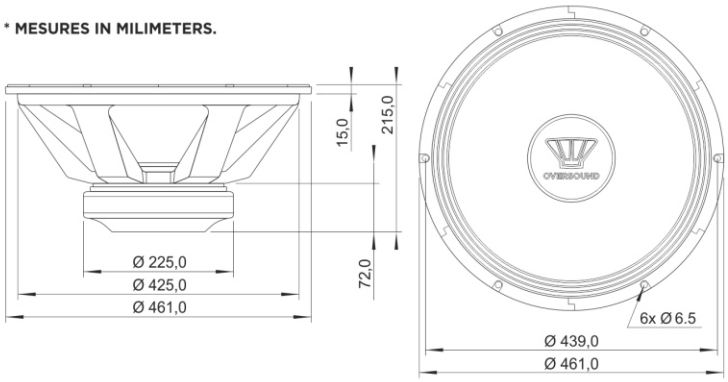

① 2 hour test done with continuous pink noise (crest factor of 6 dB) in the specific range and calculated power over the minimum impedance in the open air.

② Program power set at 3 dB above nominal specification.

③ 2.83 V. RMS.

④ Softened for 2 hours at 15 Hz at high level. Performed at 27°C, relative humidity at 44% and atmospheric pressure at 1012.2 mbar.

⑤ Specifications and design subject to change without prior notice, in accordance with the technological evolution of the product.

⑥ Curve made in ventilated box with internal volume of 130 liters, and tuning at 50 Hz. 1/12 octave smoothing.

SPEAKERS
OVERSOUND

NR 15 Annex 1: Exposure to noise above the specified limits by the Standard may cause hearing loss or damage. OVERSOUND is not responsible for the improper use of its products (ordinance 3214/78). According to FEDERAL LAW n° 11.191/06, we report that damage to hearing exposed to power above 85 decibels may occur.